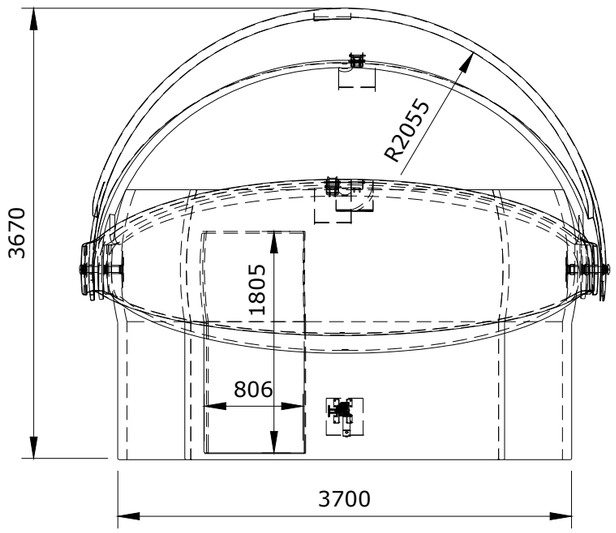

Through view

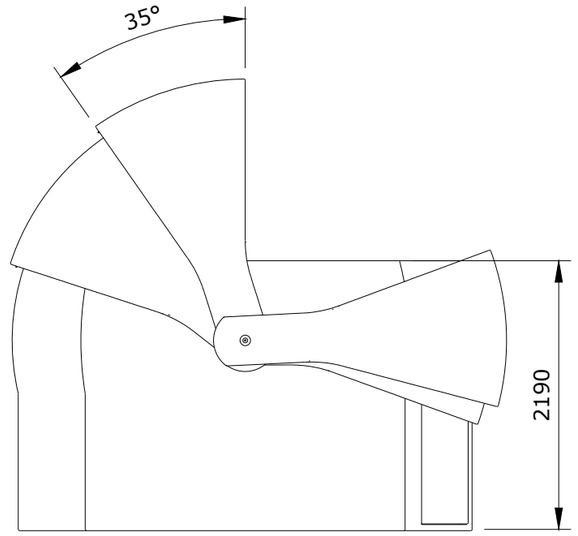

Side view

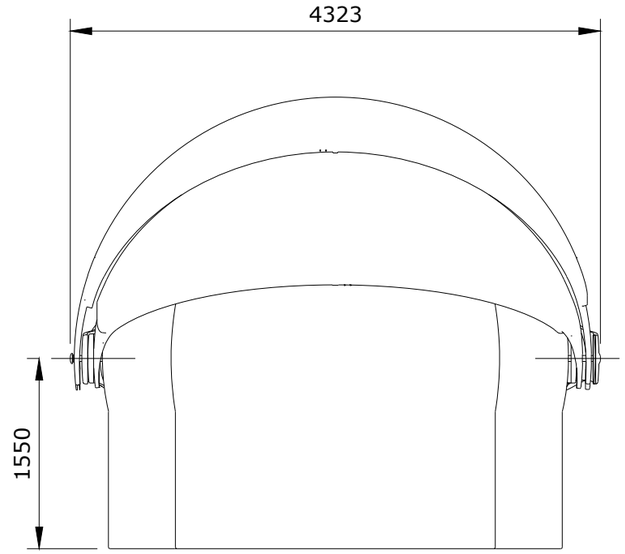

Rear view

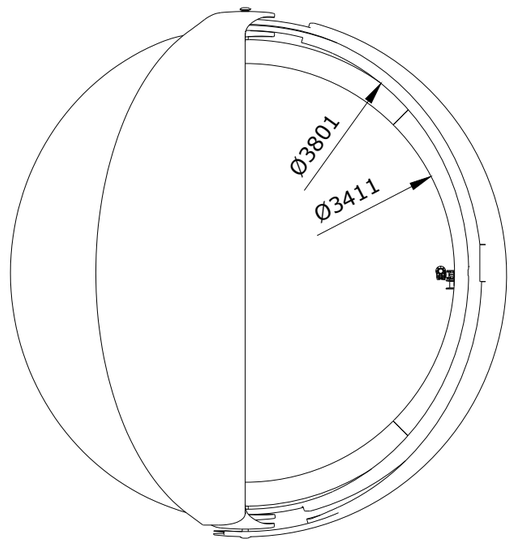

Top view

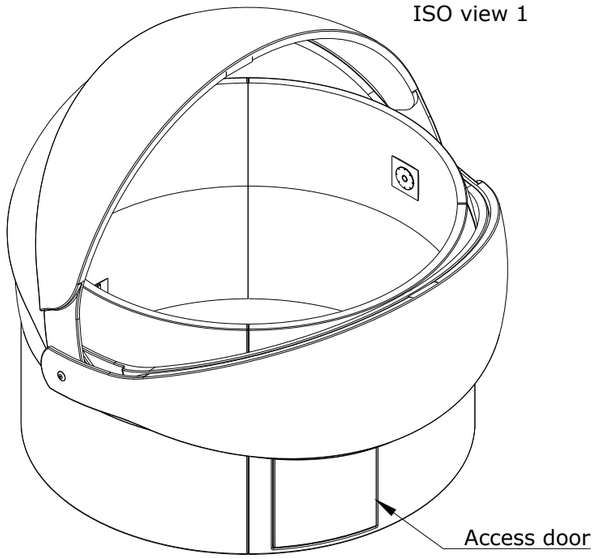

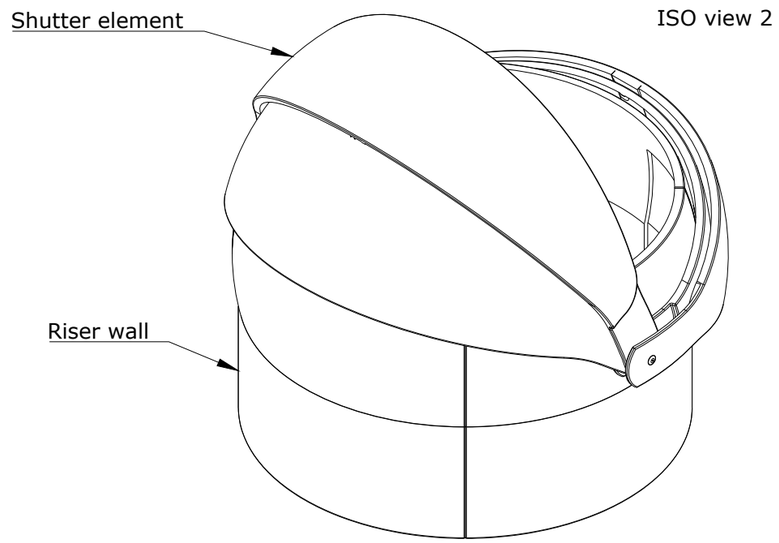

TOLERANCE	REFERENCE	CREATED BY	MATERIAL
ISO 2768 - m	eng / prod	JAG 21.11.25	GFK
DOME PARTS optical		DOKUMENT	DESCRIPTION: Unknown
Dome Parts GmbH, Keltenstraße 2, 86517 Wehringen, Germany		TITLE: Clamshell-425 v3 Observatory HIGH riser version	DRAWING NUMBER: Dwg. W- 21.11.25 (1:50)
Content of this technical drawing represents our intellectual property. Utilization and duplication only with express approval of Dome Parts GmbH.			REV. / DATE OF ISSUE / SHEET 1/1