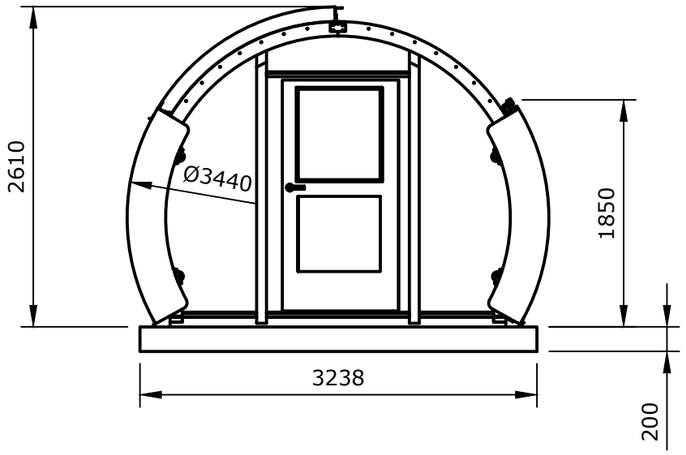

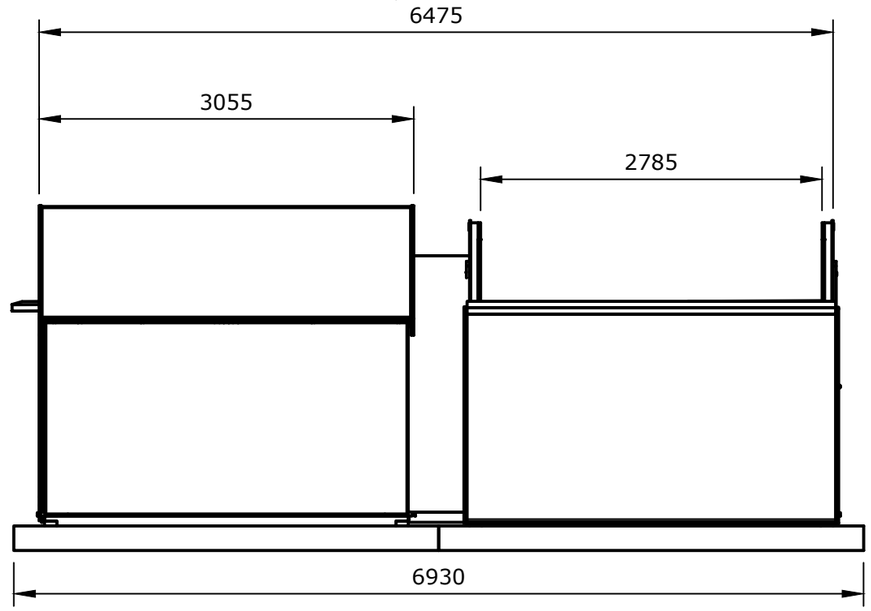

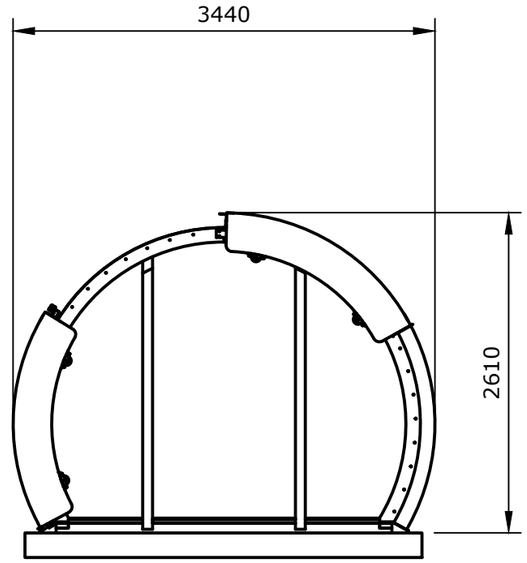

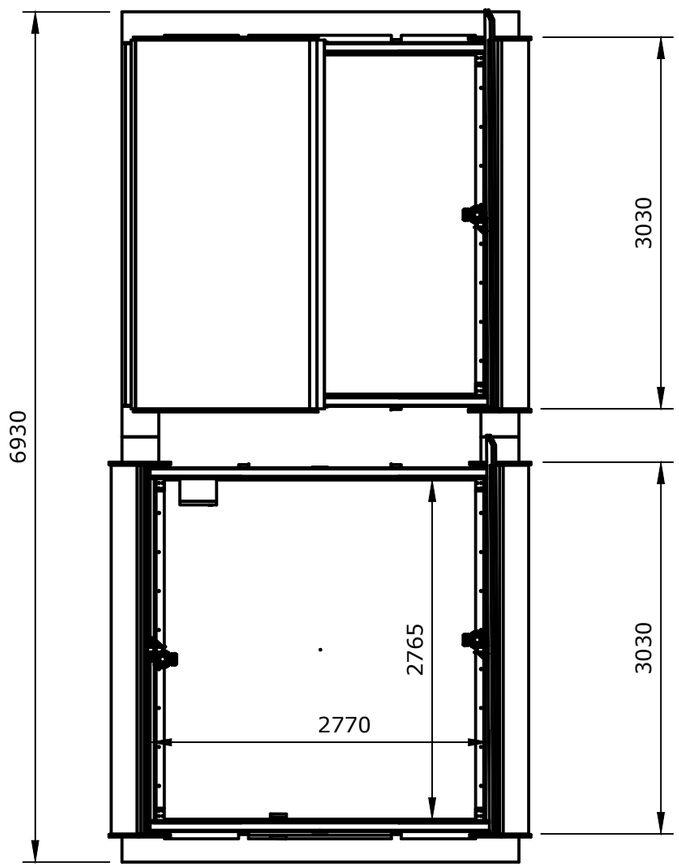

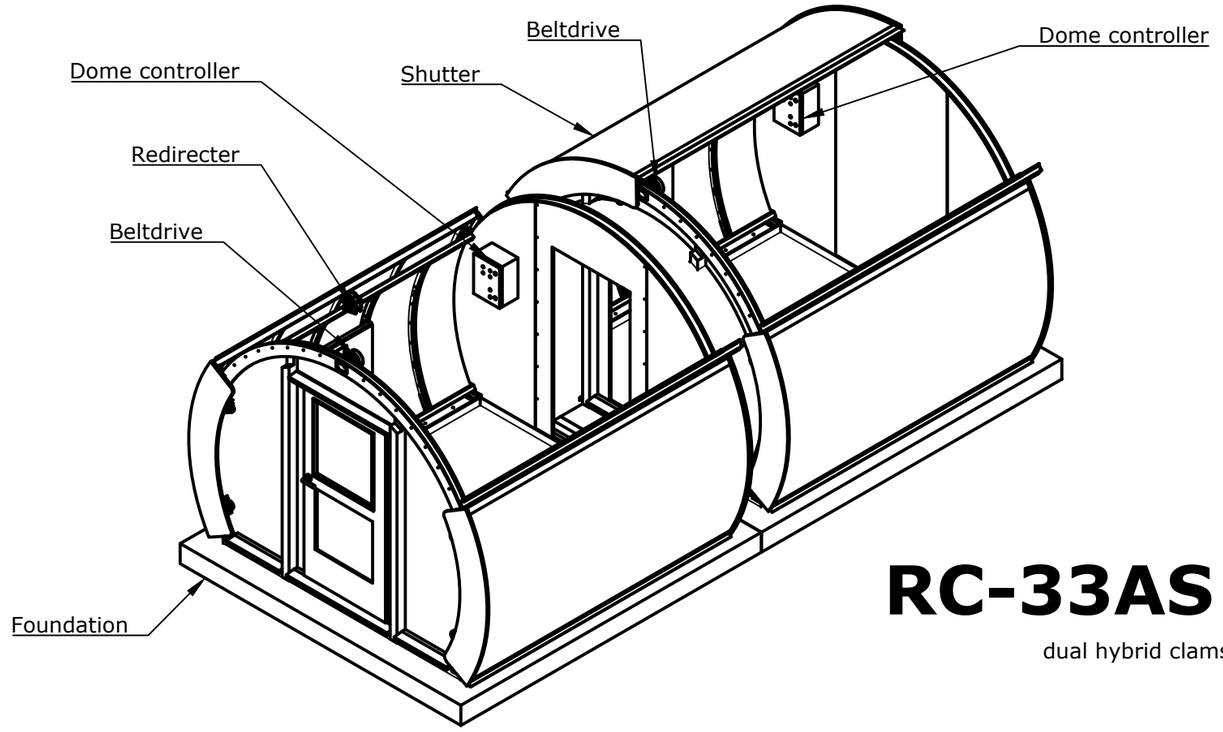

RC-33AS

dual hybrid clamshell observatory

TOLERANCE	REFERENCE	CREATED BY	MATERIAL
ISO 2768 - m		JAG 14.02.25	----
DOME PARTS optical		DOKUMENT	DESCRIPTION ----
Dome Parts GmbH Keltenstraße 2 86517 Wehringen Germany		TITLE Dual Gate RC-33 STEEL Vers. 3 v49	DRAWING NUMBER 1:50 Dwg. W- 14.02.25
Content of this technical drawing represents our intellectual property. Utilization and duplication only with express approval of Dome Parts GmbH.			REV. / DATE OF ISSUE / SHEET 2/2